KTEB/TEB
TETERBORO

JEPPESEN
1 MAR 13 (10-3A)

TETERBORO, NJ
RNAV SID

NEW YORK Departure (R)
126.7
119.2

Apt Elev 9'

Trans level: FL180 Trans alt: 18000'
1. DME/DME/IRU or GPS required.
2. RADAR required.
3. RNAV 1.

RUUDY FOUR RNAV DEPARTURE (RUUDY4.RUUDY)

(RWY 24)

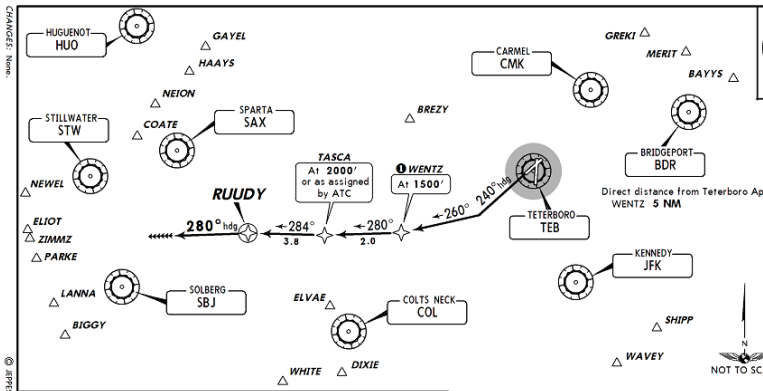

Direct distance from Teterboro Apt to: WENTZ **5 NM**

2900'
MSA TEB VOR

INITIAL CLIMB

Climb heading 240° to intercept 260° course to WENTZ, cross WENTZ at **1500'**, then on 280° track to TASCA, cross TASCA at **2000'** or as assigned by ATC, then on 284° track to RUUDY, then on heading 280°.

ROUTING

EXPECT vectors to assigned route/fix. EXPECT clearance to filed altitude/flight level within ten minutes after departure.

Departures:	EXPECT Vectors to:	Departures:	EXPECT Vectors to:
BAYYS	BDR/BAYYS.	DIXIE	ELVAE/COL/DIXIE.
BIGGY	SBJ/BIGGY.	HAAYS	HUO/HAAYS.
COATE	SAX/COATE.	WHITE	ELVAE/COL/WHITE.

This SID requires take-off minimums (for standard minimums, refer to airport chart):
Rwys 1, 6, 19: Not authorized - ATC.
Rwy 24: Standard (or lower than standard, if authorized) with minimum climb of 442' per NM to **1300'**. Minimum climb of 250' per NM from WENTZ to TASCA.

Gnd speed-KT	75	100	150	200	250	300
250' per NM	313	417	625	833	1042	1250
442' per NM	553	737	1105	1473	1842	2210

OBSTACLES

Rwy 24: Sign and trees beginning 3347' from DER, 535' RIGHT of centerline, up to 125' AGL/134' MSL. Trees 5303' from DER, 1915' RIGHT of centerline, up to 100' AGL/309' MSL.

CHANGES: None.

© JEPPESEN, 2009, 2012. ALL RIGHTS RESERVED.